MATERIALS LIST

2 1" x 4" x 12' treated lumber
1 2" x 2" x 3' treated lumber
1 2" x 4" x 4' treated lumber
1 2" x 8" x 12' treated lumber
1 1" X 6" X 3' treated lumber
1 lb. #8 2 1/2" galvanized wood screws
1 gallon water repellent or stain

TIP: Use water repellent or stain with water repellent when your job is finished to help protect your pressure treated wood from splitting, checking, and warping.

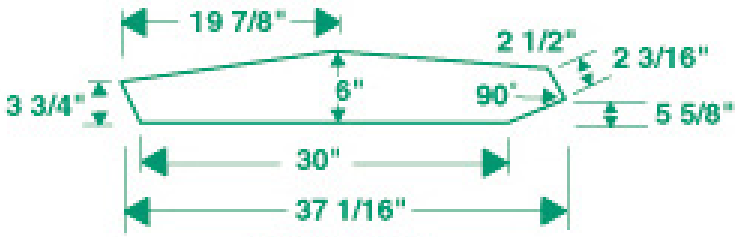

LEG DETAIL

ARM DETAIL

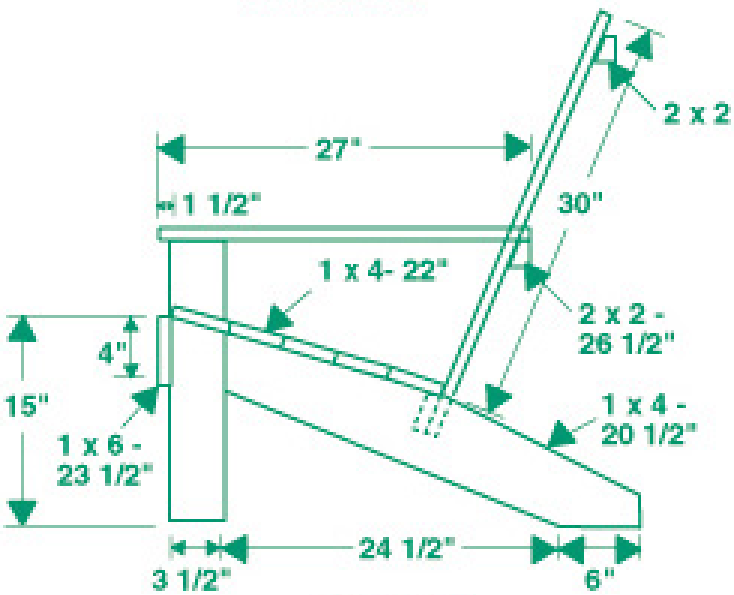

SIDE VIEW

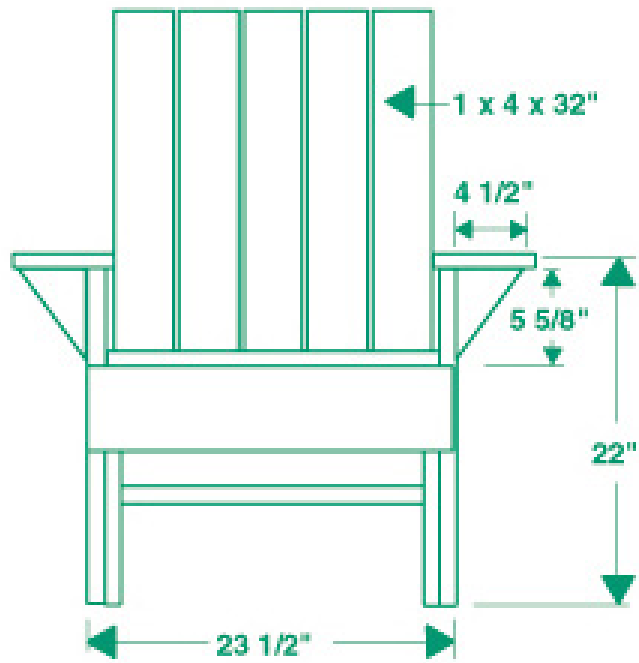

FRONT VIEW